Crankcase Heaters

The following pages list Hotwatt Crankcase Heaters by the OEM manufacturer, showing both the OEM part number and Hotwatt part number. In addition, custom designed crankcase heaters and variations to the units shown are also available.

Applications

Crankcase heaters are used to overcome the problem of migration and condensation of refrigerant in the crankcases of compressors used in air conditioning and heat pump systems. They are designed to keep the crankcase oil at a temperature higher than the coldest part of the system to prevent migration.

U. L. Recognized - Guide SEOT2, file SA4093 for use in the conditioning equipment.
C.S.A. Certified - Guide 165-E-90, file 016386-0-000 for use in air conditioning equipment.

Features

• Hotwatt Crankcase Heaters are constructed of the highest quality corrosion resistance materials and sealed against moisture.

Crankcase Heaters

Carrier Compressions

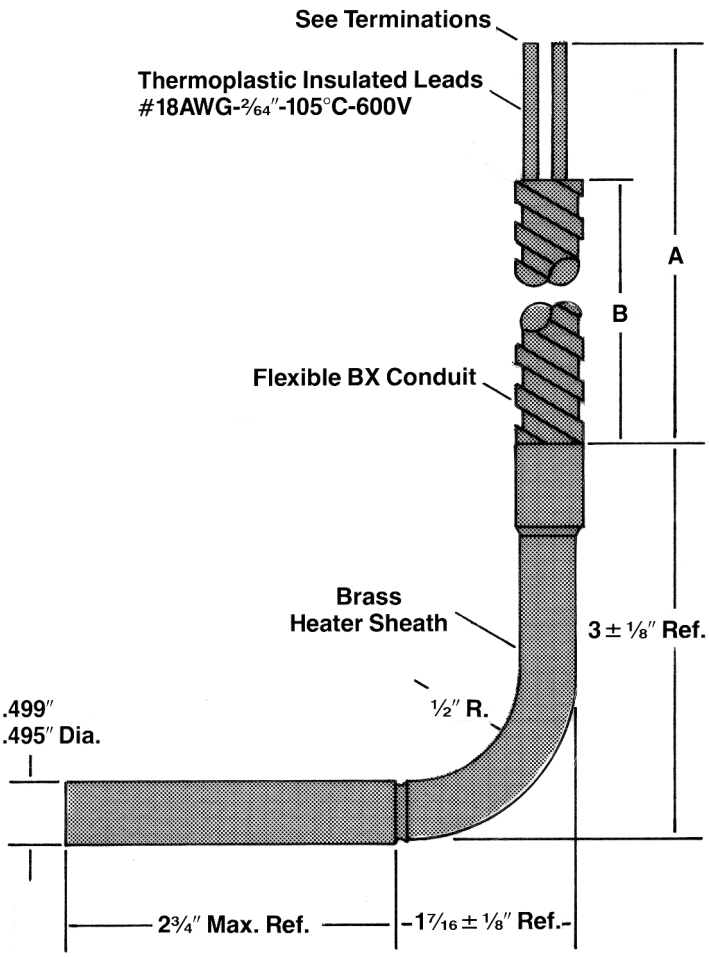

Terminations

W: 1-#8 Ring terminal, 1- ¼" Female quick connect.

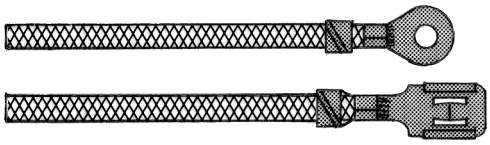

X: 2- ¼" Female quick connects.

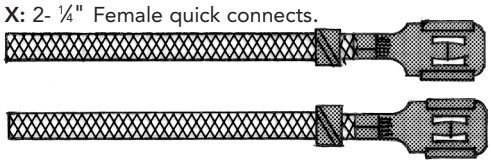

Y: 2-#8 Ring terminals.

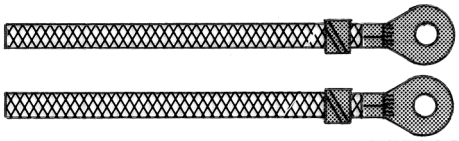

Z: Leads stripped ¼".

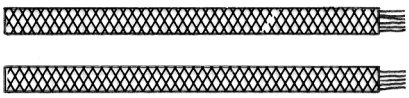

CRANKCASE

Hotwatt Part No.	Carrier Part No.	Wattage	Voltage	Terminal Type	Lead Length A"	Conduit Length B"
13A9881-21	HT36DK132	75	120	Z	24	19
13A9881-20	HT36DL472	125	240	Z	24	19
13A9881-19	HT36DL172	125	120	Z	24	19
13A9881-14	HT36FL479	125	240	Y	73	52
13A9881-13	HT36FL478	125	240	Z	15	10
13A9881-12	HT36FL477	125	240	Z	13	9
13A9881-11	HT36FL476	125	240	Y	67	52
13A9881-10	HT36FL475	125	240	W	63	28
13A9881- 9	HT36FL474	125	240	Y	51	36
13A9881-8	HT36FL463	125	240	X	48	28
13A9881-7	HT36FL379	125	120	Y	73	52
13A9881-6	HT36FL378	125	120	Z	15	10
13A9881-5	HT36FL377	125	120	Z	13	9
13A9881-4	HT36FL376	125	120	Y	67	52
13A9881-3	HT36FL375	125	120	W	63	28
13A9881-2	HT36FL374	125	120	Y	51	26
13A9881-1	HT36FL363	125	120	X	48	28

• Denotes Stock Item

Crankcase Heaters

Carrier Compressors

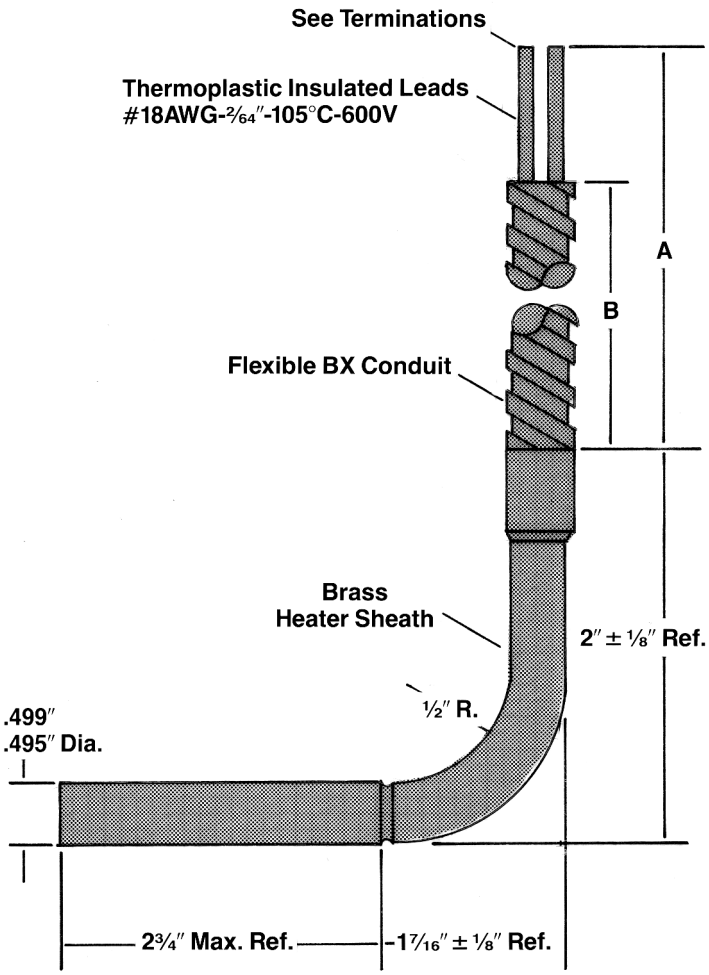

Terminations

W: 1-#8 Ring terminal, 1- ¼" Female quick connect.

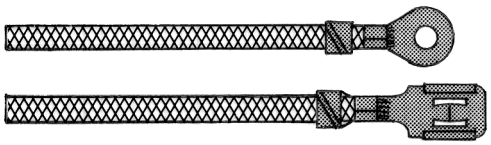

X: 2- ¼" Female quick connects.

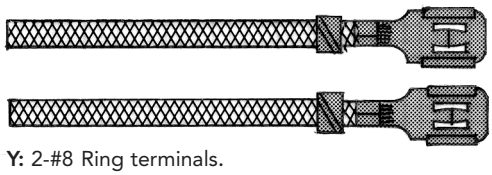

Y: 2-#8 Ring terminals.

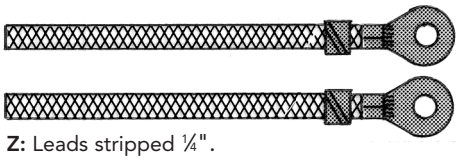

Z: Leads stripped ¼".

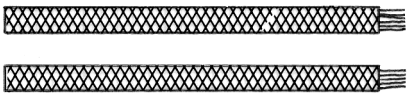

Hotwatt Part No.	Carrier Part No.	Wattage	Voltage	Terminal Type	Lead Length A"	Conduit Length B"
13A9882-18	HT36NS477	75	240	Y	87	72
13A9882-17	HT36NS377	75	120	Y	87	72
13A9882-16	HT36NS467	75	240	X	87	72
13A9882-15	HT36NS367	75	120	X	87	72
13A9882-14	HT36LS477	75	240	Y	80	60
13A9882-13	HT36LS377	75	120	Y	80	60
13A9882-12	HT36JS466	75	240	X	67	52
13A9882-11	HT36JS476	75	240	Y	67	52
13A9882-10	HT36JS376	75	120	Y	67	52
13A9882-9	HT36JS366	75	120	X	67	52
13A9882-8	HT36FS464	75	240	X	51	36
13A9882-7	HT36FS474	75	240	Y	51	36
13A9882-6	HT36FS374	75	120	Y	51	36
13A9882-5	HT36FS364	75	120	X	51	36
13A9882-4	HT36ES474	75	240	X	44	24
13A9882-3	HT36ES374	75	120	X	44	24
13A9882-2	HT36ES463	75	240	X	36	24
13A9882-1	HT36ES363	75	120	X	36	24

• Denotes Stock Item

Phone: 978-777-0070 ■ Fax: 978-774-2409

Crankcase Heaters

Carrier Compressors

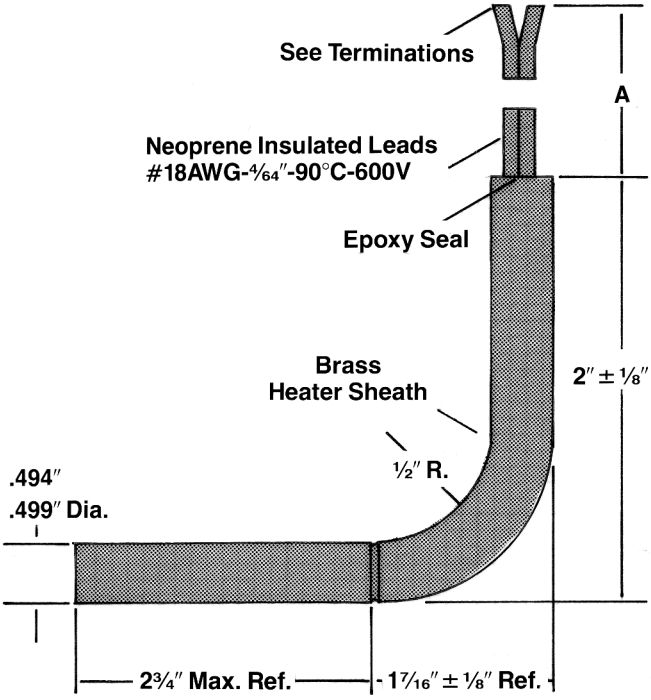

Terminations

X: 2-¼" Female quick connects.

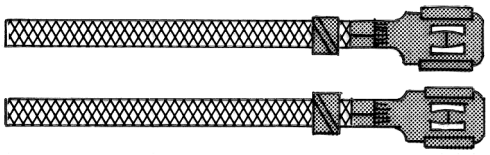

Z: Leads stripped ¼".

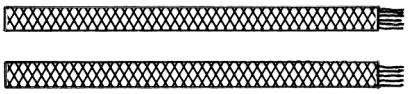

CRANKCASE

Hotwatt Part No.	Carrier Part No.	Wattage	Voltage	Lead Length A	Terminal Type
13A9883-11	HT36DL481	125	460	58″	X
13A9883-10	HT36YS241	125	240	58″	X
13A9883-9	HT36XS764	75	460	58″	X
13A9883-8	HT36XS574	75	240	58″	X
13A9883-7	HT36DL480	125	480	24″	Z
13A9883-6	HT36DK460	75	480	24″	Z
13A9883-5	HT36YS240	125	240	38″	X
13A9883-4	HT36YS120	125	120	37″	Z
13A9883-3	HT36XS120	75	120	37″	Z
13A9883-2	HT36XS573	75	240	38″	X
13A9883-1	HT36XS575	75	240	(1)38″+(1) 48″	X

• Denotes Stock Item

Crankcase Heaters

Copeland Compressors

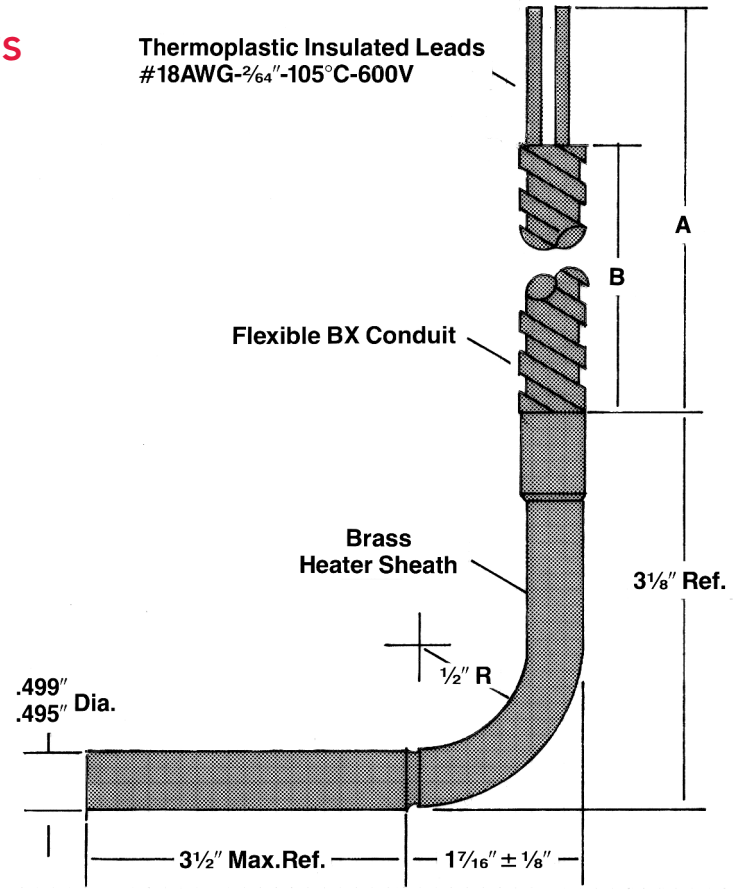

Hotwatt Part No.	Copland Part No.	Wattage	Voltage	A″	B″
13A9881-17	018-0021-00	200	120	25	19
13A9881-18	018-0021-01	200	240	25	19
13A9881-25	018-0021-02	200	120	32	26 ½
13A9881-26	018-0021-03	200	240	32	26 ½
13A9881-27	018-0021-04	200	120	39 ½	32
13A9881-28	018-0021-05	200	240	39 ½	32

• Denotes Stock Item

518-0028 Series

Hotwatt Part No.	Copland Part No.	Wattage	Voltage
13J0606 -01	518-0028-00	100	120
13J0606 -02	518-0028-01	100	240

Phone: 978-777-0070 ■ Fax: 978-774-2409

Crankcase Heaters

Copeland Compressors

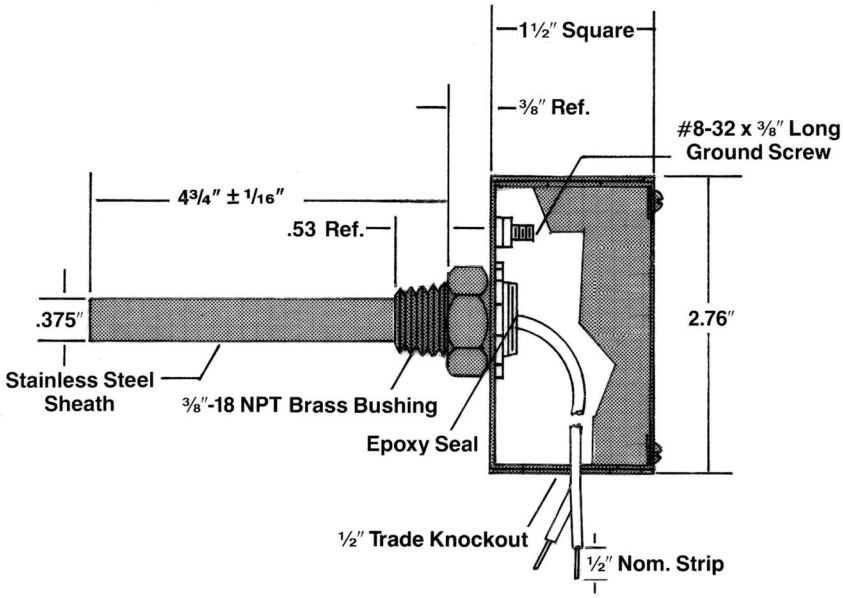

Hotwatt Part No.	Copeland Part No.	Wattage	Voltage	Lead Length″
13A0054-1	518-0001-00 or -08	65	600	8 ± ¼
13A0054-2	518-0001-01 or -09	65	480	8 ± ¼
13A0054-3	518-0001-02	65	240	8 ± ¼
13A0054-4	518-0001-03	65	120	8 ± ¼

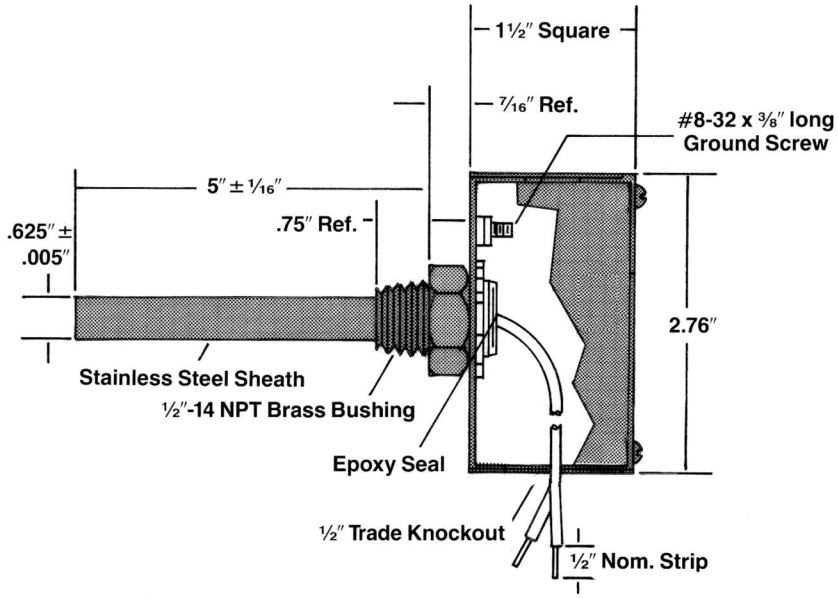

Hotwatt Part No.	Copeland Part No.	Wattage	Voltage	Lead Length″
13A9996-1	518-0002-00 or -09	100	600	8 ± ¼
13A9996-2	518-0002-01 or -10	100	480	8 ± ¼
13A9996-3	518-0002-02	100	240	8 ± ¼
13A9996-4	518-0002-03	100	120	8 ± ¼
13A9996-5	518-0002-04	100	420	8 ± ¼

• Denotes Stock Item

Crankcase Heaters

Copeland Compressors

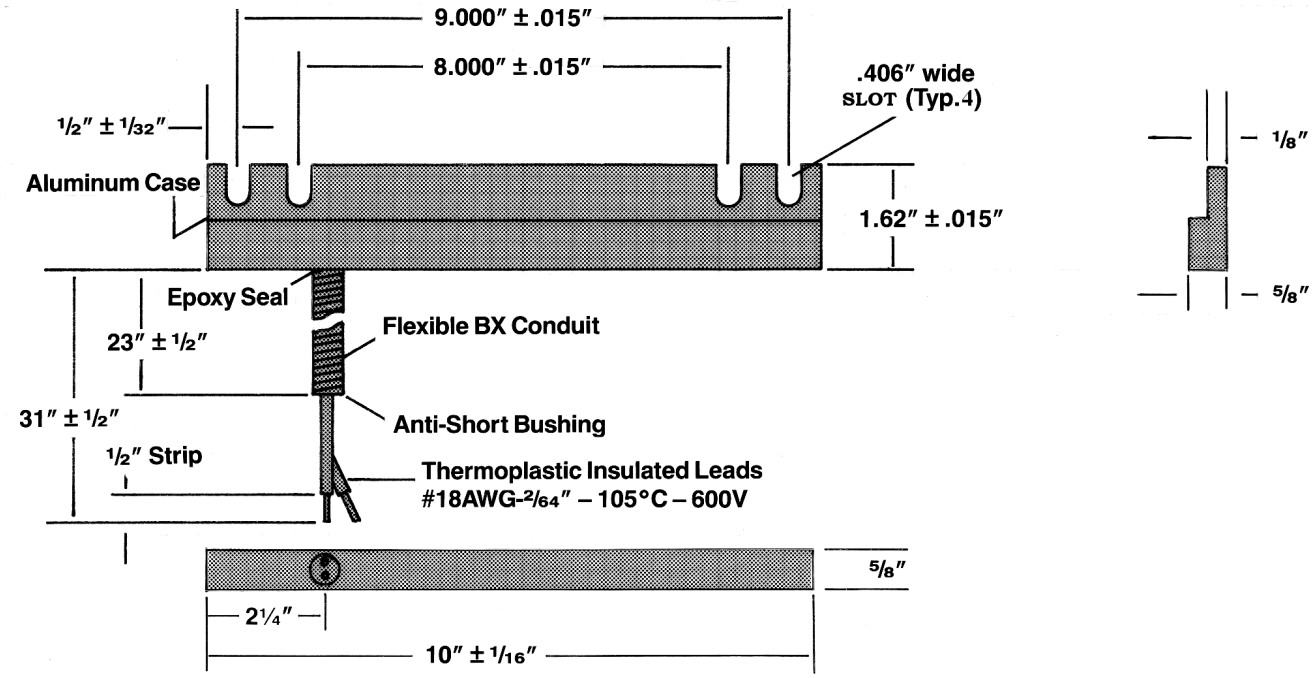

Hotwatt Part No.	Copeland Part No.	Wattage	Voltage
13J0603-1	018-0034-00	65	120
13J0603-2	018-0034-01	65	240
13J0603-3	018-0034-02	65	480
13J0603-4	018-0034-03	65	600
13J0603-5	018-0034-04	65	12

• Denotes Stock Item

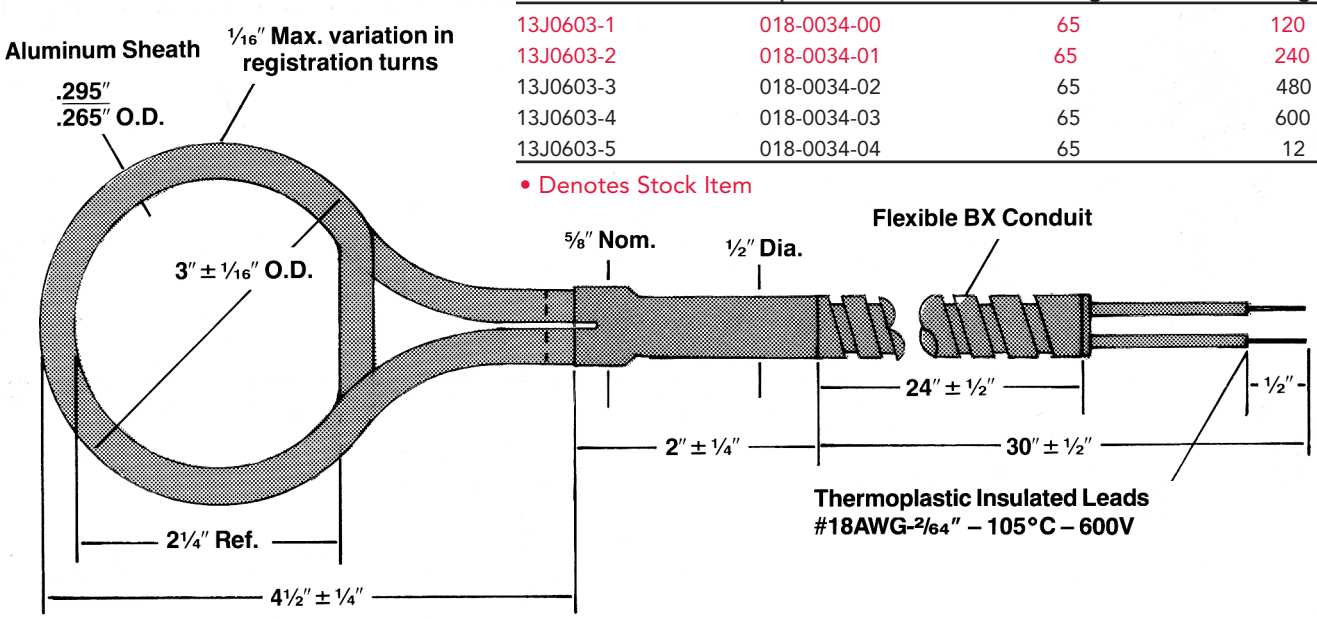

Hotwatt Part No.	Copeland Part No.	Wattage	Voltage
13R0115-02	018-0028-01 or -05	50	120
13R0115-03	018-0028-02 or -06	50	240

Crankcase Heaters

Trane Compressors

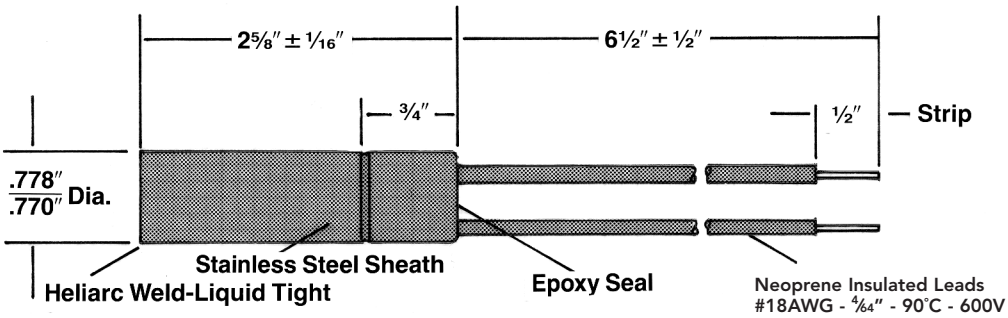

Hotwatt Part No.	Trane Part No.	Wattage	Voltage
13J2500-4	13140419-04	60	380
13J2500-3	13140419-03	60	575
13J2500-2	13140419-02	60	460
13J2500-1	13140419-01	60	230

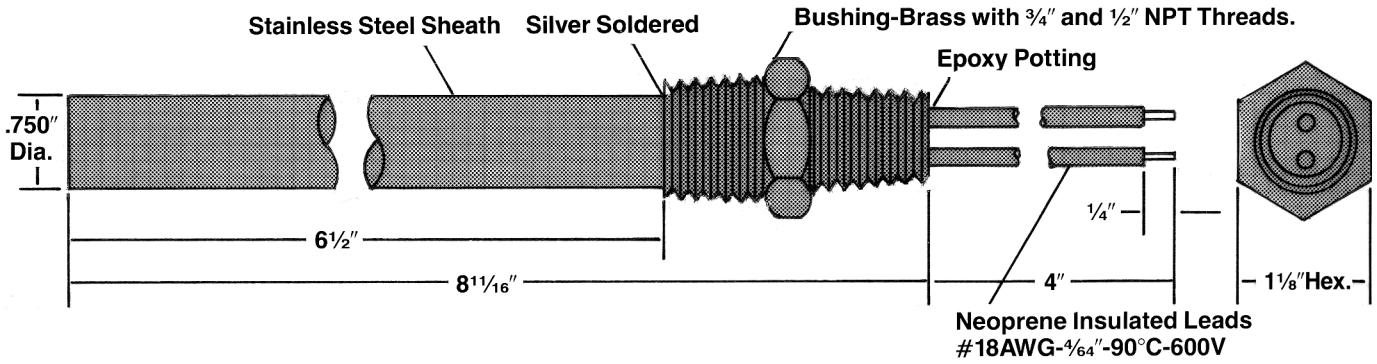

Hotwatt Part No.	Trane Part No.	Wattage	Voltage
13E6016-1	X13140587-01	75W	220V
13E6016-2	X13140587-02	75W	37V
13E6016-3	X13140587-03	75W	115V

Crankcase Heaters

Trane Compressors

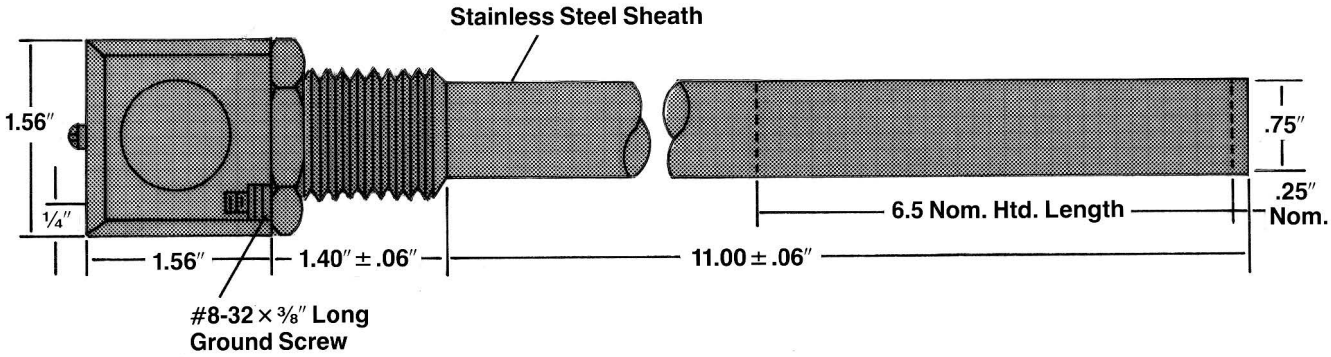

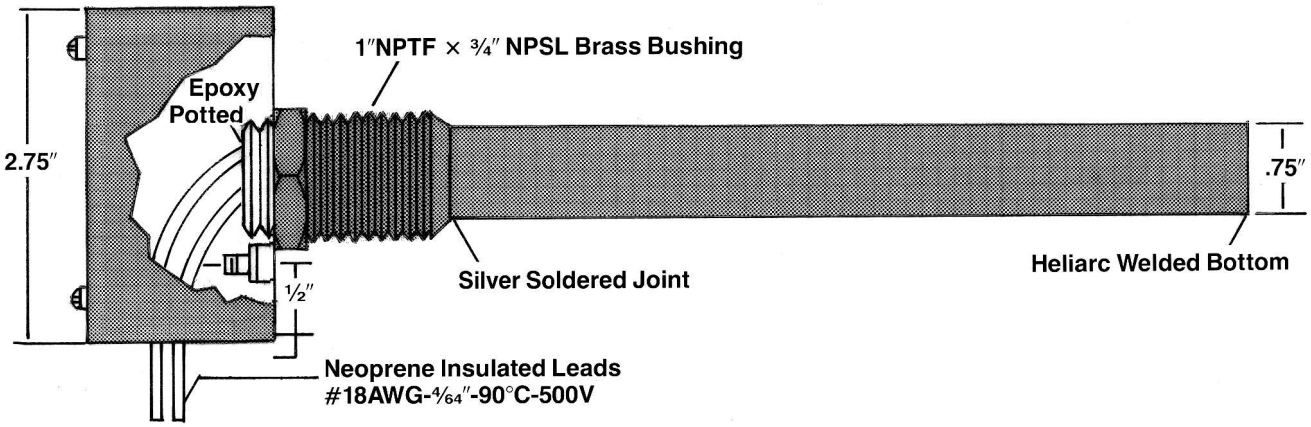

Hotwatt Part No.	Trane Part No.	Wattage	Voltage
13A0260-2	X13140396-02	140	240
13A0260-1	X13140396-01	140	120

Crankcase Heaters

Trane Compressors

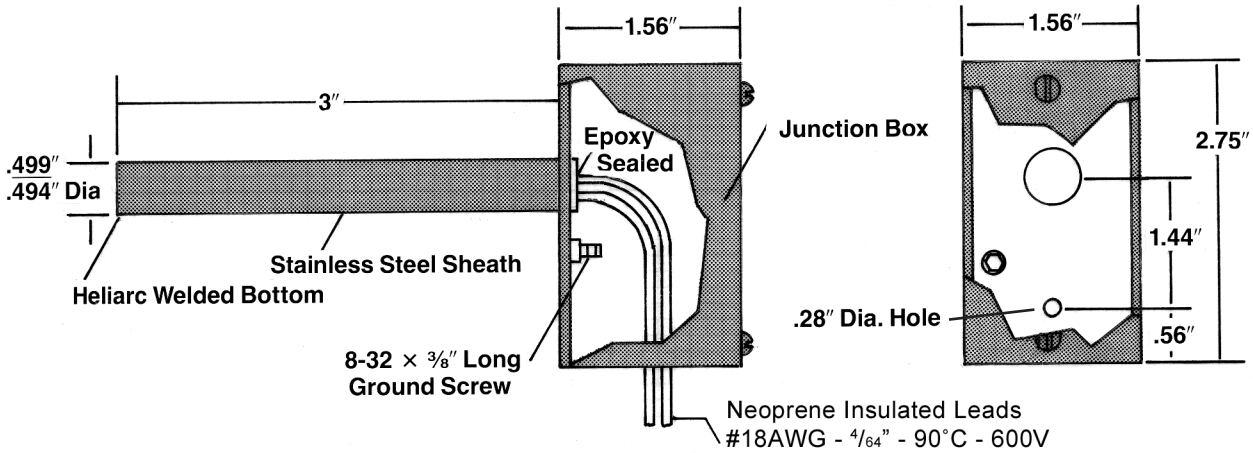

Hotwatt Part No.	Trane Part No.	Wattage	Voltage	Color Code Leads
13A7251-4	13140113	100	240	RED
13A7251-3	13140114	100	120	BLACK
13A7251-2	13120181	75	240	RED
13A7251-1	13120180	75	120	BLACK

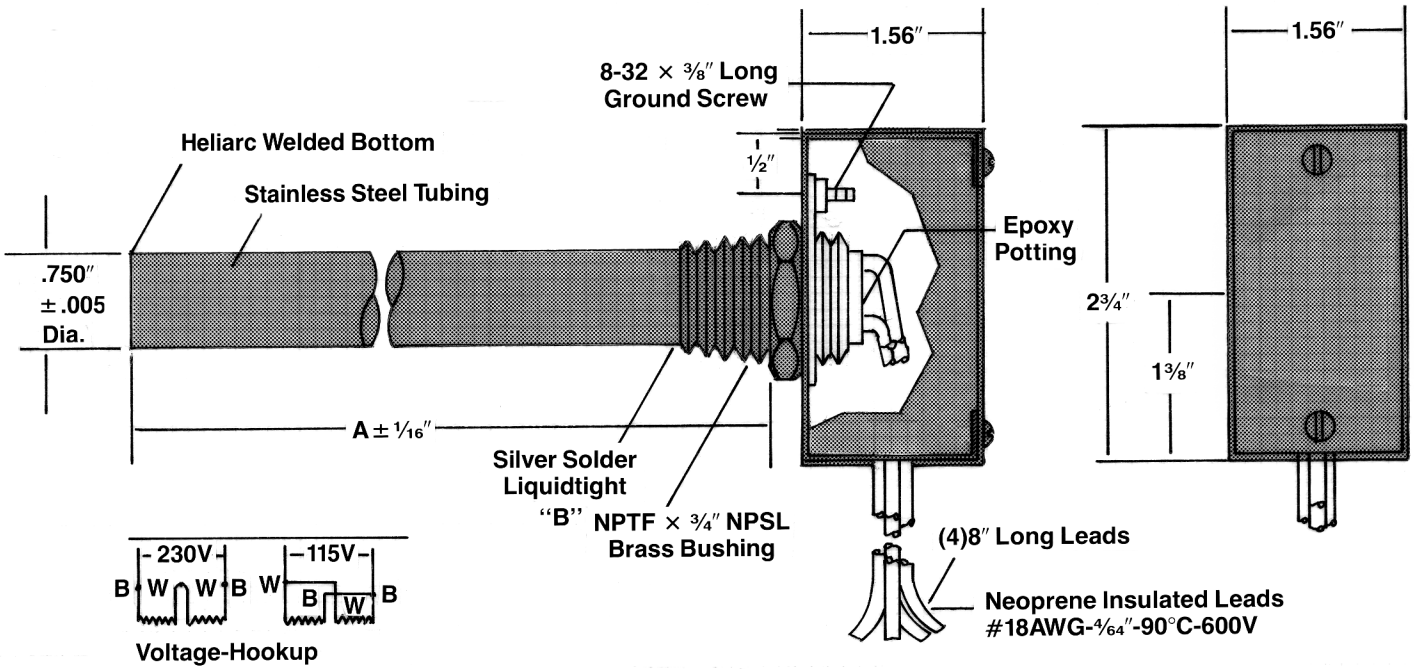

Hotwatt Part No.	Trane Part No.	Wattage	Voltage	A	B
13J1501-1	13140159-01	100	115/230	7 1/4″	3/4″ NPTF
13J1501-2	13140159-02	100	115/230	11″	1″ NPTF

Crankcase Heaters

Borg Warner Compressors

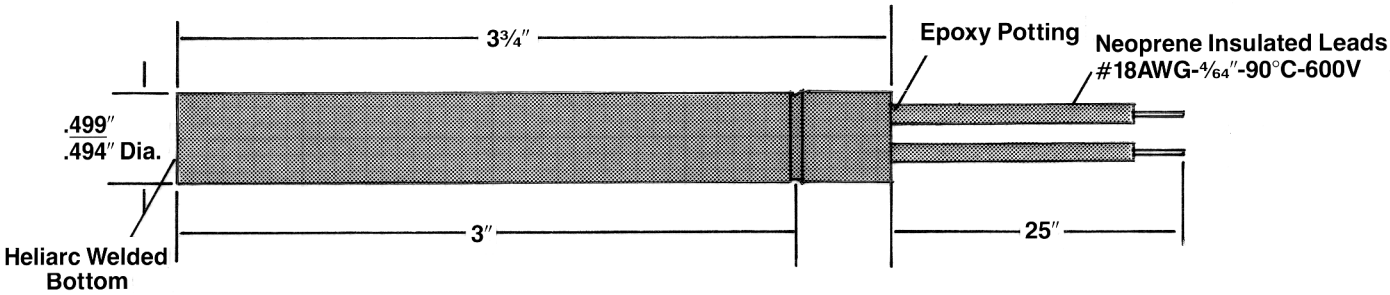

Hotwatt Part No.	Borg Warner Part No.	Wattage	Voltage	Lead Color Code
13A0159	025-19205A	200	120	BLACK

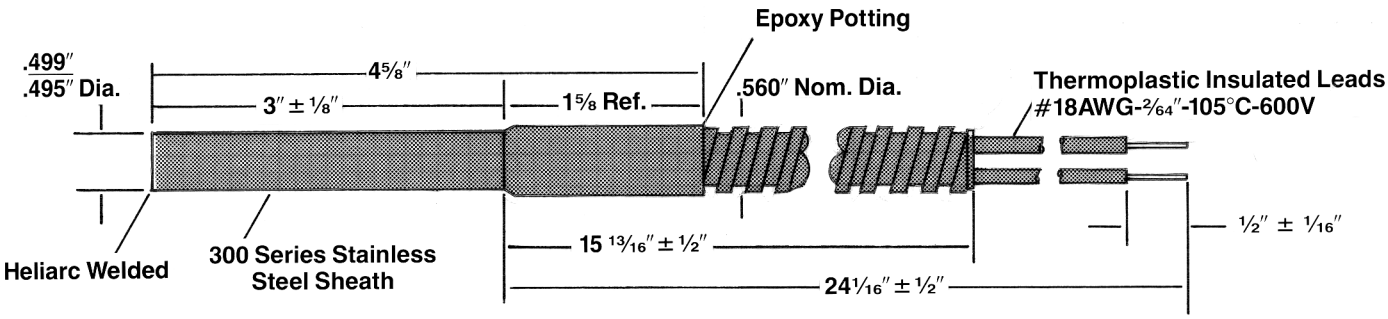

Hotwatt Part No.	Borg Warner Part No.	Wattage	Voltage
13A0331-1	25-21963-000	60	480
13A0331-2	25-21964-000	60	600

Phone: 978-777-0070 ■ Fax: 978-774-2409

Crankcase Heaters

Borg Warner Compressors

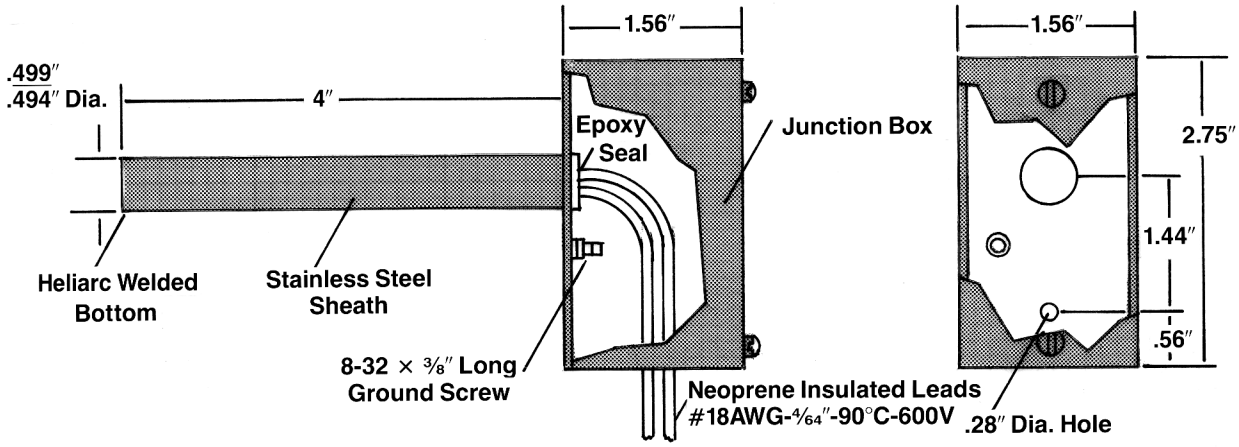

Hotwatt Part No.	Borg Warner Part No.	Wattage	Voltage	Lead Color Code
13A7251-6	025-1934-7C-002	200	240	RED
13A7251-5	025-1934-7C-001	200	120	BLACK

CRANKCASE

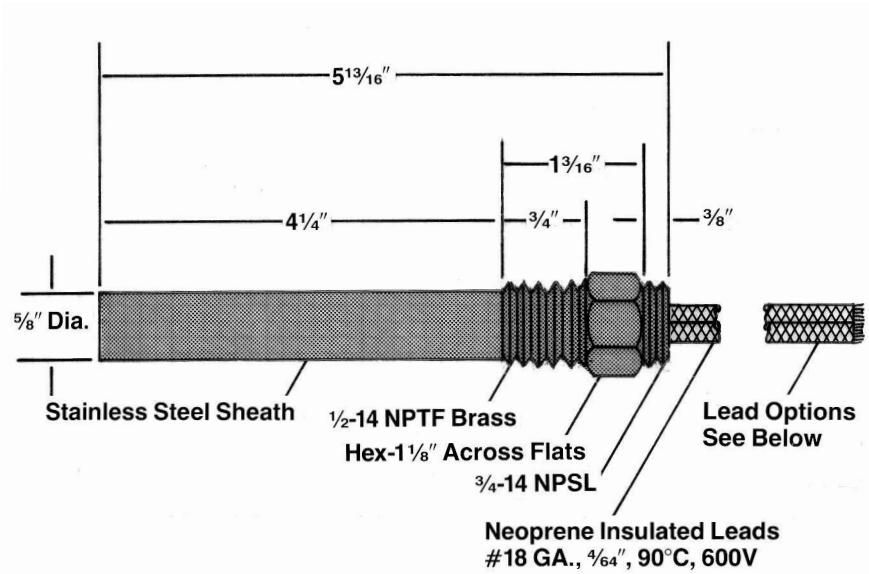

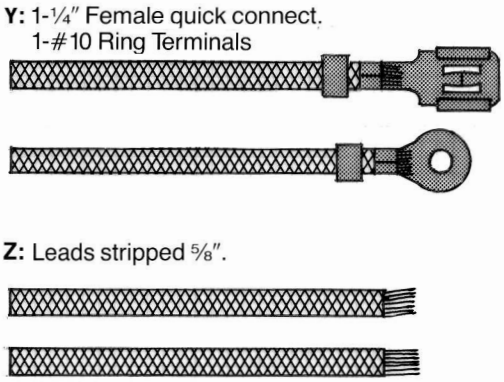

Hotwatt Part No.	Borg Warner Part No.	Wattage	Voltage	Lead Options	Lead Length
13J2401-1	025-14220	100	240	Y	53″ & 48″
13J2401-2	025-12335	100	240	Z	16″
13J2401-3	025-16313	100	240	Z	60″
13J2401-4	025-18611	100	120	Z	34″

Crankcase Heaters

Westinghouse/McQuay Compressors

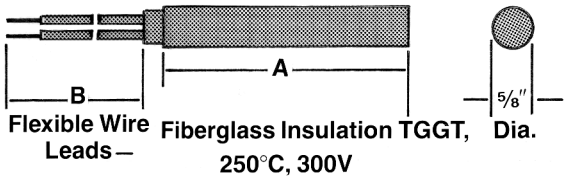

Hotwatt Part No.	West/McQ Part No.	Wattage	Voltage	A″	B″
13J1405-1	350A412-1	250	115	9	36
13J1405-2	350A412-2	250	208	9	27
13J1405-3	350A412-3	250	230	8 ⅞	27
13J1405-4	350A412-4	250	440	9	27
13J1405-5	350A412-5	250	550	9	27
13J1405-6	350A412-6	65	115	3 ⅞	3
13J1405-7	350A412-7	65	230	3 ⅞	3
13J1405-8	350A412-8	65	440	3 ⅞	3
13J1405-9	350A412-9	65	550	3 ⅞	3
13J1405-10	350A412-10	65	230	3 ⅞	3
13J1405-11	350A412-11	65	440	3 ⅞	3
13J1405-12	350A412-12	65	550	3 ⅞	3
13J1405-13	350A412-13	250	400	9	27
13J1405-14	350A412-17	550	240	13 3/16	10
13J1405-15	350A412-29	350	115	6.5	36
13J1405-16	350A412-30	300	115	7.0	60
13J1405-17	350A412-32	300	115	7	72
13J1405-18	350A412-43	150	115	5 ⅞	36
13J1405-19	350A412-46	200	230	2 ½	60
13J1405-20	350A412-47	300	230	7	60
13J1405-21	350A412-48	300	115	7	60
13J1405-22	350A412-51	250	115	8 ⅞	60
13J1405-23	350A412-52	200	115	2 ½	60

CRANKCASE

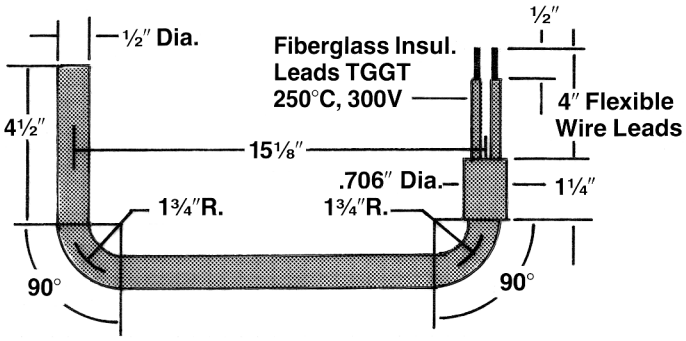

Hotwatt Part No.	West/McQ Part No.	Wattage	Voltage
13J2305-1	350A412-14	100	230
13J2305-2	350A412-15	100	440
13J2305-3	350A412-16	100	550
13J2305-4	350A412-34	100	120

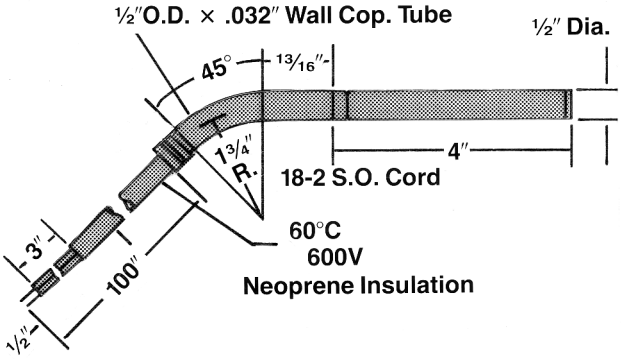

Hotwatt Part No.	West/McQ Part No.	Wattage	Voltage
13J2306-1	350A412-18	65	230
13J2306-2	350A412-19	65	440
13J2306-3	350A412-20	65	550

Crankcase Heaters

Westinghouse/McQuay Compressors

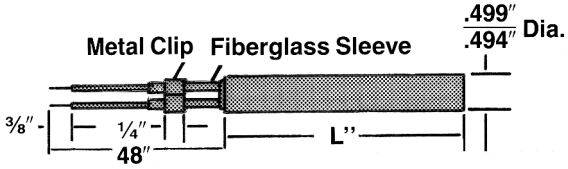

Hotwatt Part No.	West/McQuay Part No.	Wattage	Voltage	L″
13J1305-1	350A412-21	200	220	6
13J1305-2	350A412-22	200	440	6
13J1305-3	350A412-23	200	550	6
13J1305-4	350A412-24	350	220	10
13J1305-5	350A412-25	350	440	10
13J1305-6	350A412-26	350	550	10
13J1305-7	350A412-27	200	115	6
13J1305-8	350A412-28	350	115	10

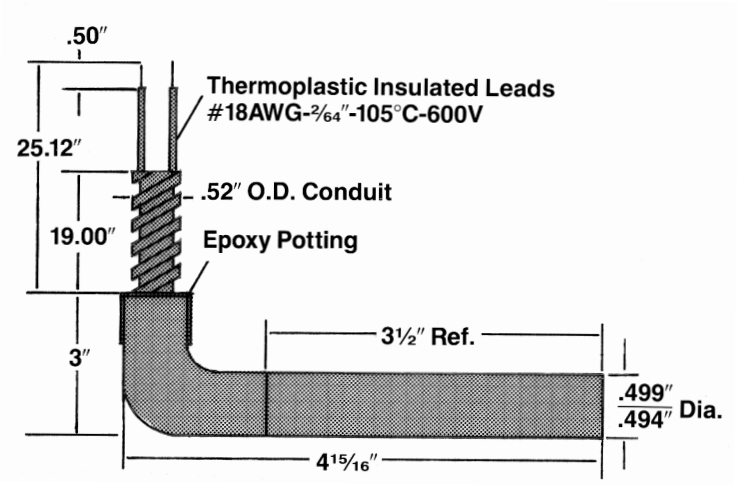

Hotwatt Part No.	West/McQuay Part No.	Wattage	Voltage
13A9881-17	350A412-44	200	120

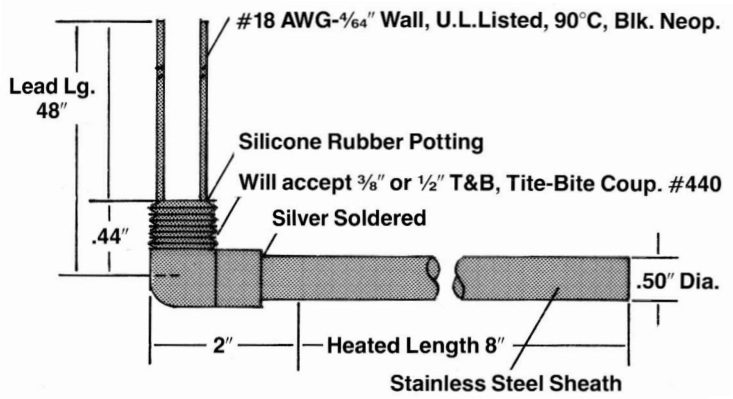

Hotwatt Part No.	West/McQuay Part No.	Wattage	Voltage
13J2307-1	350A412-31	100	115
13J2307-2	350A412-35	100	230
13J2307-3	350A412-36	100	460
13J2307-4	350A412-37	100	575

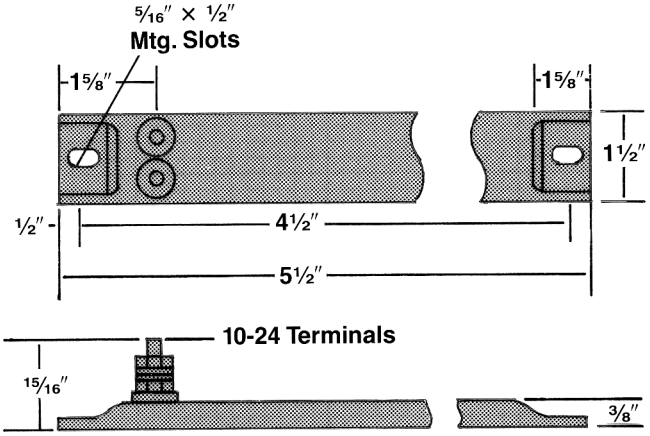

Hotwatt Part No.	West/McQuay Part No.	Wattage	Voltage
13J4602	350A412-33	125	240

CRANKCASE

Crankcase Heaters

Westinghouse/McQuay Compressors

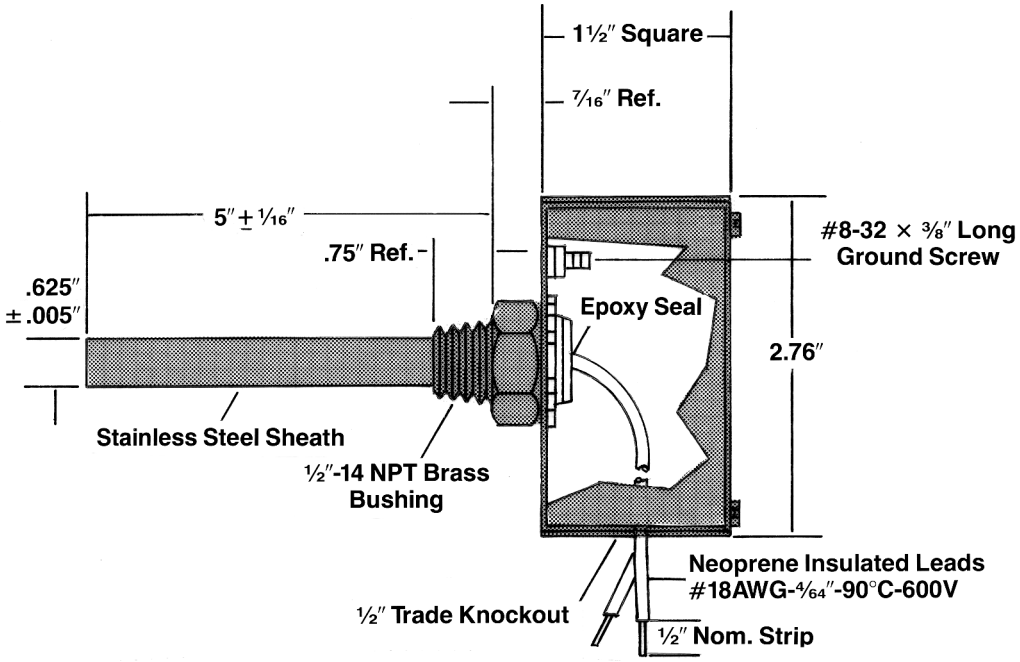

Hotwatt Part No.	West/McQ Part No.	Wattage	Voltage
13A9996-4	350A412-45	100	120

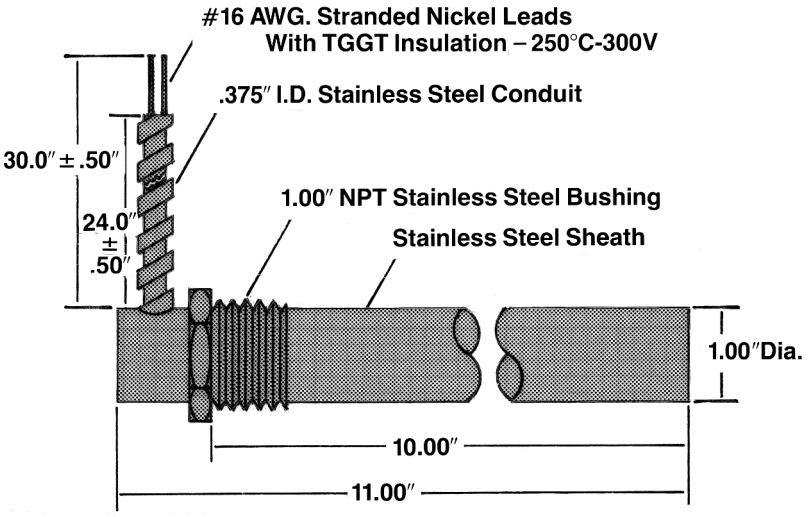

Hotwatt Part No.	West/McQ Part No.	Wattage	Voltage
13E0109-1	350A412-53	250	120
13E0109-2	350A412-54	400	120

Phone: 978-777-0070 ■ Fax: 978-774-2409

Crankcase Heaters

Fedders Compressors

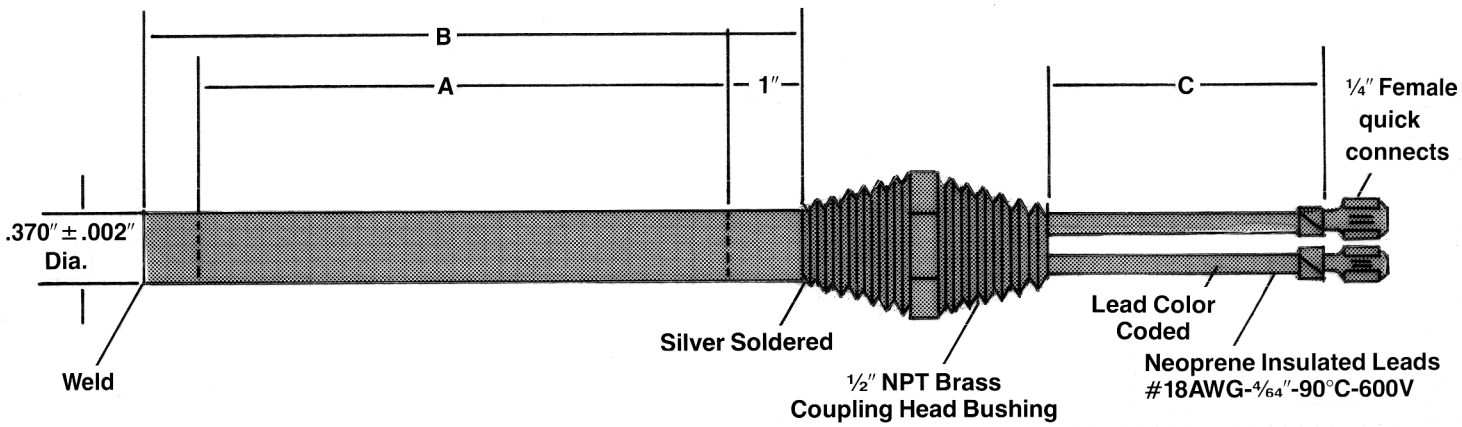

Hotwatt Part No.	Fedders Part No.	Wattage	Voltage	Lead Color Code	A″	B″	C″
13A6580-10	16-06-0217B-006	200	480	RED	2⅛	3⅜	54
13A6580-9	16-06-0217B-005	200	240	BLACK	2⅛	3⅜	54
13A6580-8	16-06-0217B-004	200	120	ORANGE	2⅛	3⅜	54
13A6580-7	16-06-0217B-002	275	240	BLACK	5⅛	6⅜	48
13A6580-6	16-06-0217B-001	275	120	ORANGE	5⅛	6⅜	48
13A6580-5	16-06-0217B-003	275	480	RED	5⅛	6⅜	48